TRACO POWER

AC/DC Power Supply

TPI 180A-M Series, 180 Watt

- **High power-density: 180 Watt in 3”x2” package (open frame)**
- **I/O isolation 3000 VAC rated for 250 VAC working voltage**
- **Certification according to IEC/EN/UL 62368-1**
- **Peak power operation up to 220 Watt for 5s**
- **Operating temperature –40°C to 85°C**
- **Active power factor correction >0.9**
- **Operating up to 5000m altitude**
- **High efficiency up to 94%**
- **Protection class II prepared**
- **3-year product warranty**

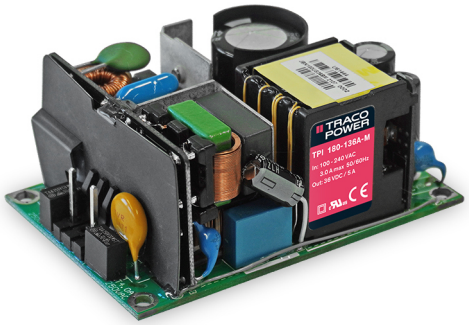

UL 62368-1 IEC 62368-1

The TPI 180A-M is series of open frame AC/DC power supplies coming in an open frame package. They feature a reinforced double I/O isolation (3000 VAC) system an come with the latest industrial standard IEC/ENUL 62368-1. The excellent efficiency of up to 94% allows a high power-density and compact design (3” x 2”). The operating temperature range is –40°C to +85°C with derating above 50°C. In natural convection operation these power supplies deliver 150 Watt going up to 180 Watt with forced air cooling. Additionally, they can deliver 220 Watt peak power for 5s. The EMC characteristic is dedicated for applications in industrial and medical fields. High reliability is provided by using high quality components and an excellent thermal management making the TPI 180A-M an ideal solution for industrial and medical devices and for demanding safety and space critical applications.

Models

Order Code	Output Power max.	Output Voltage nom. (adjustable)	Output Current max. (Forced air cooling)	Output Current max. (Natural convection)	Output Current peak	Efficiency typ.
TPI 180-112A-M	180 W	12 VDC (11.0 - 13.0 VDC)	15'000 mA	12'500 mA	18'334 mA	92 %
TPI 180-115A-M		15 VDC (13.8 - 16.2 VDC)	12'000 mA	10'000 mA	14'667 mA	92 %
TPI 180-124A-M		24 VDC (22.1 - 25.9 VDC)	7'500 mA	6'250 mA	9'167 mA	94 %
TPI 180-136A-M		36 VDC (33.1 - 38.9 VDC)	5'000 mA	4'170 mA	6'111 mA	93 %
TPI 180-148A-M		48 VDC (44.2 - 51.8 VDC)	3'750 mA	3'130 mA	4'583 mA	93 %
TPI 180-153A-M		53 VDC (48.8 - 57.2 VDC)	3'400 mA	2'830 mA	4'151 mA	93 %

Options

on demand (backorder with MOQ non stocking item)	- Optional model with 18 VDC / 10'000 mA - Optional model with 28 VDC / 6'430 mA

Input Specifications

Input Voltage	- AC Range	Operational Range:	85 - 264 VAC (Full Range)
		Rated Range:	100 - 240 VAC (Full Range)
	- DC Range	Operational Range:	120 - 370 VDC (Designed for, no certification)
		Polarity:	+DC: L / –DC: N
Input Frequency			47 - 63 Hz
Input Current	- Full Load & Vin = 230 VAC		1'500 mA max.
	- Full Load & Vin = 115 VAC		2'550 mA max.
Power Consumption	- At no load		200 mW max. (Ready to meet ErP directive)
	- At no load		150 mW typ. (Ready to meet ErP directive)
Input Inrush Current	- At 230 VAC		100 A max.
	- At 115 VAC		50 A max.
Power Factor	- At 230 VAC		0.9 min. (Active Power Factor Correction)
	- At 115 VAC		0.9 min. (Active Power Factor Correction)
Input Protection			T 4 A / 250 VAC
Recommended Input Fuse			4'000 mA (slow blow) (The need of an external fuse has to be assessed in the final application.)

Output Specifications

Output Voltage Adjustment			±8% (By trim potentiometer) Output power must not exceed rated power!
Voltage Set Accuracy			±1% max.
Regulation	- Input Variation (Vmin - Vmax)		0.2% max.
	- Load Variation (0 - 100%)		0.5% max.
Boost Power			Output Current peak: See model table Peak power time: 5 s max. Peak power duty cycle: 20% max. Average operation power: 99 W max. (at natural convection)
Ripple and Noise (20 MHz Bandwidth)		12 VDC model:	200 mVp-p max. (w/ 1 µF)
		15 VDC model:	200 mVp-p max. (w/ 1 µF)
		18 VDC model:	220 mVp-p max. (w/ 1 µF)
		24 VDC model:	220 mVp-p max. (w/ 1 µF)
		28 VDC model:	220 mVp-p max. (w/ 1 µF)
		36 VDC model:	220 mVp-p max. (w/ 1 µF)
		48 VDC model:	350 mVp-p max. (w/ 0.1 µF)
		53 VDC model:	350 mVp-p max. (w/ 0.1 µF)
Capacitive Load		12 VDC model:	10'000 µF max.
		15 VDC model:	6'800 µF max.
		18 VDC model:	4'700 µF max.
		24 VDC model:	2'700 µF max.
		28 VDC model:	1'800 µF max.
		36 VDC model:	1'200 µF max.
		48 VDC model:	680 µF max.
		53 VDC model:	560 µF max.
Minimum Load			Not required
Temperature Coefficient			±0.02 %/K max.
Hold-up Time	- At 230 VAC		10 ms min.
	- At 115 VAC		10 ms min.
Start-up Time	- At 230 VAC		1'500 ms max.
	- At 115 VAC		1'500 ms max.
Short Circuit Protection			Continuous, Automatic recovery
Output Current Limitation			130 - 175% of Iout max. 150% typ. of Iout max.

All specifications valid at nominal voltage, resistive full load and +25°C after warm-up time, unless otherwise stated.

Overvoltage Protection			115 - 135% of Vout nom.
Transient Response	- Response Deviation		3% typ. / 10% max. (75% to 100% Load Step)
	- Response Time		600 µs typ. (75% to 100% Load Step)

Safety Specifications

Safety Standards	- IT / Multimedia Equipment		EN 62368-1 IEC 62368-1 UL 62368-1
	- Certification Documents		www.tracopower.com/overview/tpi180a-m
Protection Class			Class I & II (Prepared): Reinforced Insulation
Pollution Degree			PD 2
Over Voltage Category			OVC II

EMC Specifications

EMI Emissions	- Conducted Emissions		EN 55011 class B (internal filter) EN 55032 class B (internal filter) FCC Part 15 class B (internal filter) FCC Part 18 class B (internal filter)
	- Radiated Emissions		EN 55011 class A (internal filter) EN 55032 class A (internal filter) FCC Part 15 class A (internal filter) FCC Part 18 class A (internal filter)
	- Harmonic Current Emissions		EN 61000-3-2, class D
	- Voltage Fluctuations & Flicker		EN 61000-3-3
EMS Immunity			EN 55024 (IT Equipment) EN 55035 (Multimedia)
	- Electrostatic Discharge	Air:	EN 61000-4-2, ±15 kV, perf. criteria A
		Contact:	EN 61000-4-2, ±8 kV, perf. criteria A
	- RF Electromagnetic Field		EN 61000-4-3, 20 V/m, perf. criteria A
	- EFT (Burst) / Surge		EN 61000-4-4, ±2 kV, perf. criteria A
		L to L:	EN 61000-4-5, ±1 kV, perf. criteria A
		L to PE:	EN 61000-4-5, ±2 kV, perf. criteria A
	- Conducted RF Disturbances		EN 61000-4-6, 20 Vrms, perf. criteria A
	- PF Magnetic Field	Continuous:	EN 61000-4-8, 30 A/m, perf. criteria A
		1 s:	EN 61000-4-8, 1000 A/m, perf. criteria A
	- Voltage Dips & Interruptions	230 VAC / 50 Hz:	EN 61000-4-11 30%, 25 periods, perf. criteria A >95%, 0.5 periods, perf. criteria B >95%, 250 periods, perf. criteria B
		115 VAC / 60 Hz:	EN 61000-4-11 30%, 25 periods, perf. criteria A >95%, 0.5 periods, perf. criteria B >95%, 250 periods, perf. criteria B

General Specifications

Relative Humidity			95% max. (non condensing)
Temperature Ranges	- Operating Temperature		–40°C to +85°C
	- Storage Temperature		–40°C to +85°C
Power Derating	- High Temperature	See application note:	www.tracopower.com/overview/tpi180a-m
	- Low Input Voltage		1.33 %/V below 100 VAC
Over Temperature Protection Switch Off	- Protection Mode		115°C min. / 125°C typ. / 135°C max. (Automatic recovery at 112°C typ.)
	- Measurement Point	See application note:	www.tracopower.com/overview/tpi180a-m
Cooling System	- Option 1		Forced air cooling (with external fan, 10 CFM)
	- Option 2		Natural convection (20 LFM)
Altitude During Operation			5'000 m max.

All specifications valid at nominal voltage, resistive full load and +25°C after warm-up time, unless otherwise stated.

Switching Frequency		135 - 205 kHz (PWM) 170 kHz typ. (PWM)
Insulation System		Reinforced Insulation
Working Voltage (rated)		250 VAC
Isolation Test Voltage	- Input to Output, 60 s	3'000 VAC
	- Input to Case or PE, 60 s	2'000 VAC
	- Output to Case or PE, 60 s	2'000 VAC
Creepage	- Input to Output	27.5 mm min.
	- Input to Case or PE	5 mm min.
	- Output to Case or PE	4.3 mm min.
Clearance	- Input to Output	9.3 mm min.
	- Input to Case or PE	5 mm min.
	- Output to Case or PE	4.3 mm min.
Isolation Resistance	- Input to Output, 500 VDC	100 MΩ min.
Isolation Capacitance	- Input to Output, 100 kHz, 1 V	1'250 pF typ. / 1'500 pF max.
Leakage Current (264 VAC / 63 Hz)	- Touch Current	300 µA max.
Reliability	- Calculated MTBF	1'145'000 h (MIL-HDBK-217F, ground benign)
Environment	- Vibration	IEC 60068-2-6 5 g, 3 axis, sine sweep, 3x30 min, 5-500 Hz
	- Mechanical Shock	IEC 60068-2-27 50 g, 3 axis, 11 ms
	- Thermal Shock	MIL-STD-810F
Housing Type		Open Frame
Mounting Type		Chassis Mount
Connection Type		Pin Connector
Weight		162 g
Environmental Compliance	- REACH Declaration	www.tracopower.com/info/reach-declaration.pdf REACH SVHC list compliant REACH Annex XVII compliant
	- RoHS Declaration	www.tracopower.com/info/rohs-declaration.pdf Exemptions: 7a, 7c-I (RoHS exemptions refer to the component concentration only, not to the overall concentration in the product (O5A rule). The SCIP number is provided on request.)

Supporting Documents

Overview Link (for additional Documents)	www.tracopower.com/overview/tpi180a-m

All specifications valid at nominal voltage, resistive full load and +25°C after warm-up time, unless otherwise stated.

Outline Dimensions

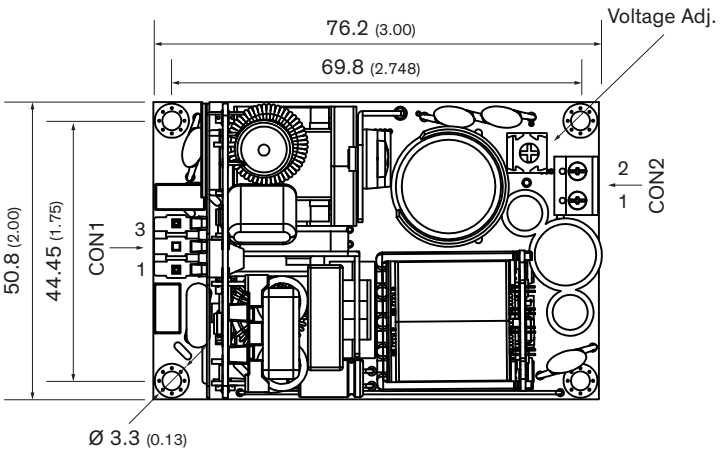

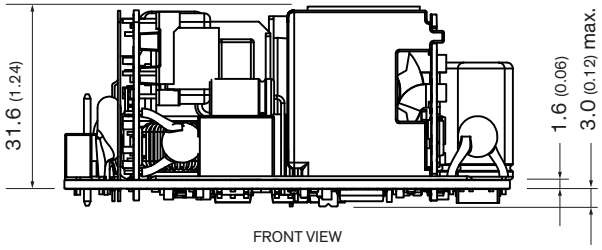

Pin connectors			
Input (CON1)		**Output** (CON2)	
Pin	**Function**	**Pin**	**Function**
1	AC (N) / DC–	**1**	+Vout
3	AC (L) / DC+	**2**	–Vout

CON1: Molex Housing 90-50-8031
Molex Crimp Terminals 08500106 (2478),
08520112 (6838),
45570

All dimensions in mm (inch)

Tolerance: X.X ±0.5 (X.XX ±0.02)
X.XX ±0.25 (X.XXX ±0.01)

CON2 screw locked torque: max. 2.5 kgfcm / 0.25 Nm
wires 24 -14 AWG

© Copyright 2022 Traco Electronic AG